SD-836120618

PART REV	DWG ISSUE	DATE	ECN NO.	APPVD BY	REL BY
-	-	8-20-15	UMI 5718	DW	DW

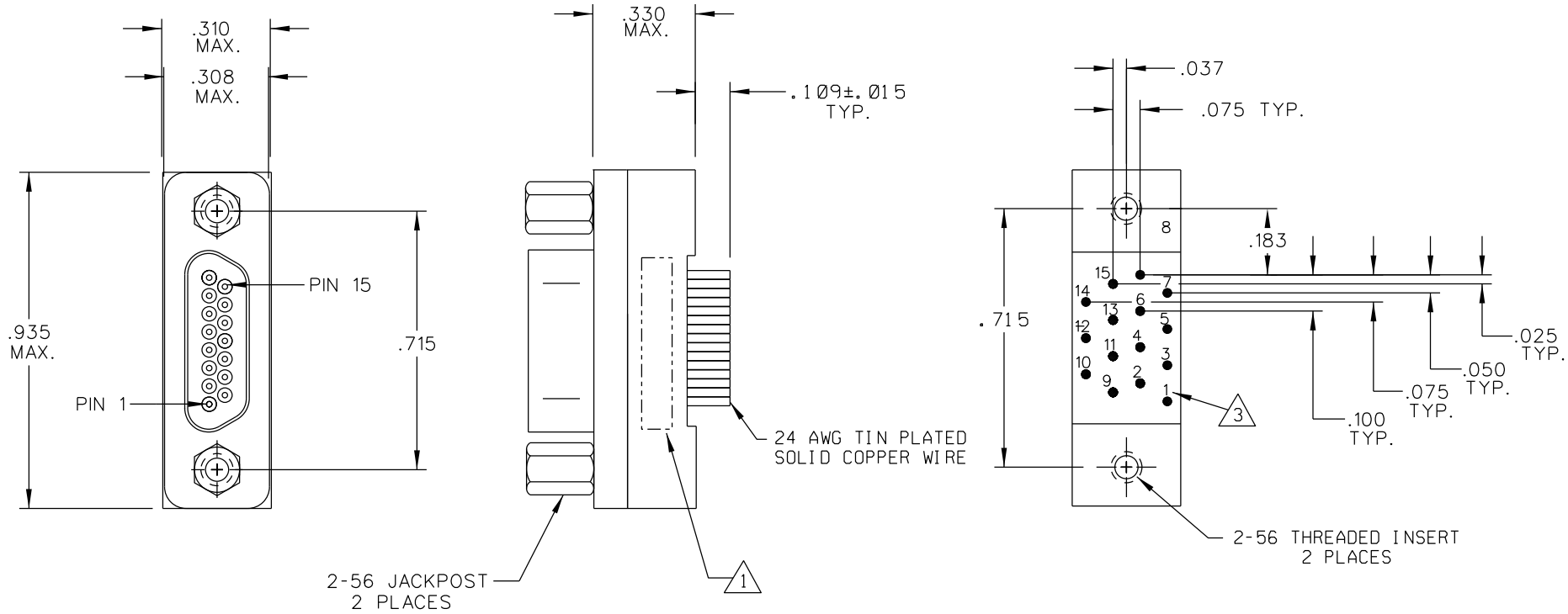

4. PERFORMANCE SPECIFICATIONS:
CURRENT RATING: 3 AMPS MAX.
INSULATION RESISTANCE: 5000 MEGOHMS MIN.
DWV: 600 VAC;
TEMPERATURE RATING: 125°C

3 NUMBERS ON BACKSHELL ARE SHOWN FOR REFERENCE ONLY AND DO NOT APPEAR ON PART

2 MATERIALS:
SHELL: 6061-T6 ALUMINUM PER QQ-A200/8 CADMIUM PLATED PER AMS-QQ-P-416
INSULATOR AND BACKSHELL: PPS PER MIL-M-24519 GST-40F
PIN CONTACTS: C17200 BERYLLIUM COPPER PER ASTM B194, GOLD PLATED PER ASTM B488
24 AWG SOLID WIRE LEADS: TIN PLATED COPPER ALLOY
HARDWARE: PASSIVATED STAINLESS STEEL IAW MIL-DTL-83513/5.

1 MARKING: "UMI", UMI PART NO., AND DATE CODE.

NOTES: UNLESS OTHERWISE SPECIFIED.

QUALITY SYMBOLS CRITICAL C SPECIAL S KEY K	UNLESS SPECIFIED: ALL DIMENSIONS IN INCHES GENERAL TOLERANCES: 3 PLACE ±.005 2 PLACE ±.01 ANGULAR ±2°	SCALE NONE	DWG SIZE B	THIRD ANGLE PROJECTION	REVISE ON CAD ONLY
		DRAWN BY & DATE DW 9-10-10		TITLE: CIRCUIT CONNECTOR, CM6R15P07T	
		CHECKED BY & DATE SEE ECN		MATERIAL: 2	Ulti-Mate Connector Inc.
	ALL EXTERNAL SPECIFICATIONS REFERENCED ON THIS DRAWING SHALL BE TO THE LATEST REVISION IN EFFECT	APPROVED BY & DATE SEE ECN			
		CAD FILENAME SD-836120618.DGN		PART NO. 836120618	DRAWING NO. SD-836120618 / SHEET NO. 1 OF 1
	Ulti-Mate CAGE CODE 58967	THIS DRAWING CONTAINS INFORMATION THAT IS PROPRIETARY TO ULTI-MATE INCORPORATED AND SHOULD NOT BE USED WITHOUT WRITTEN PERMISSION.			PART REV -