PART REV	DWG ISSUE	DATE	ECN NO.	APPVD BY	REL BY
B	B	12/8/21	UMI7918	DU	DW

SD-839000101

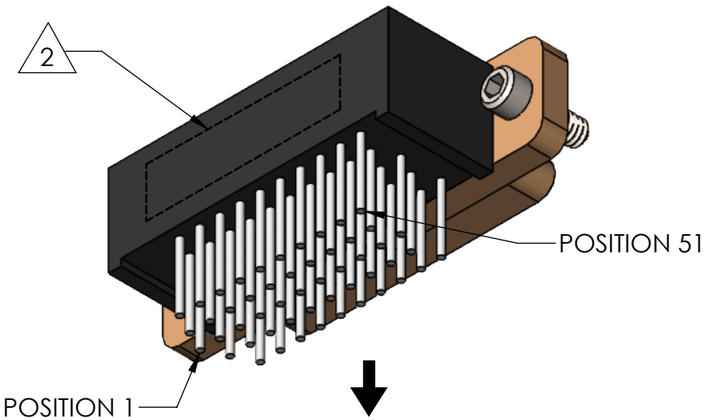

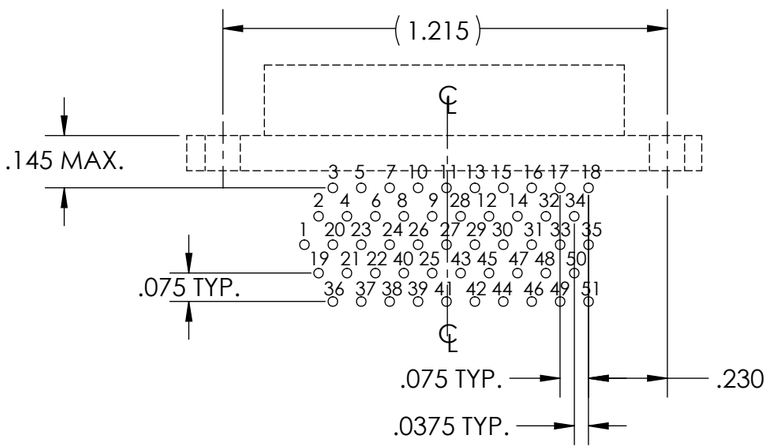

RECOMMENDED PCB LAYOUT

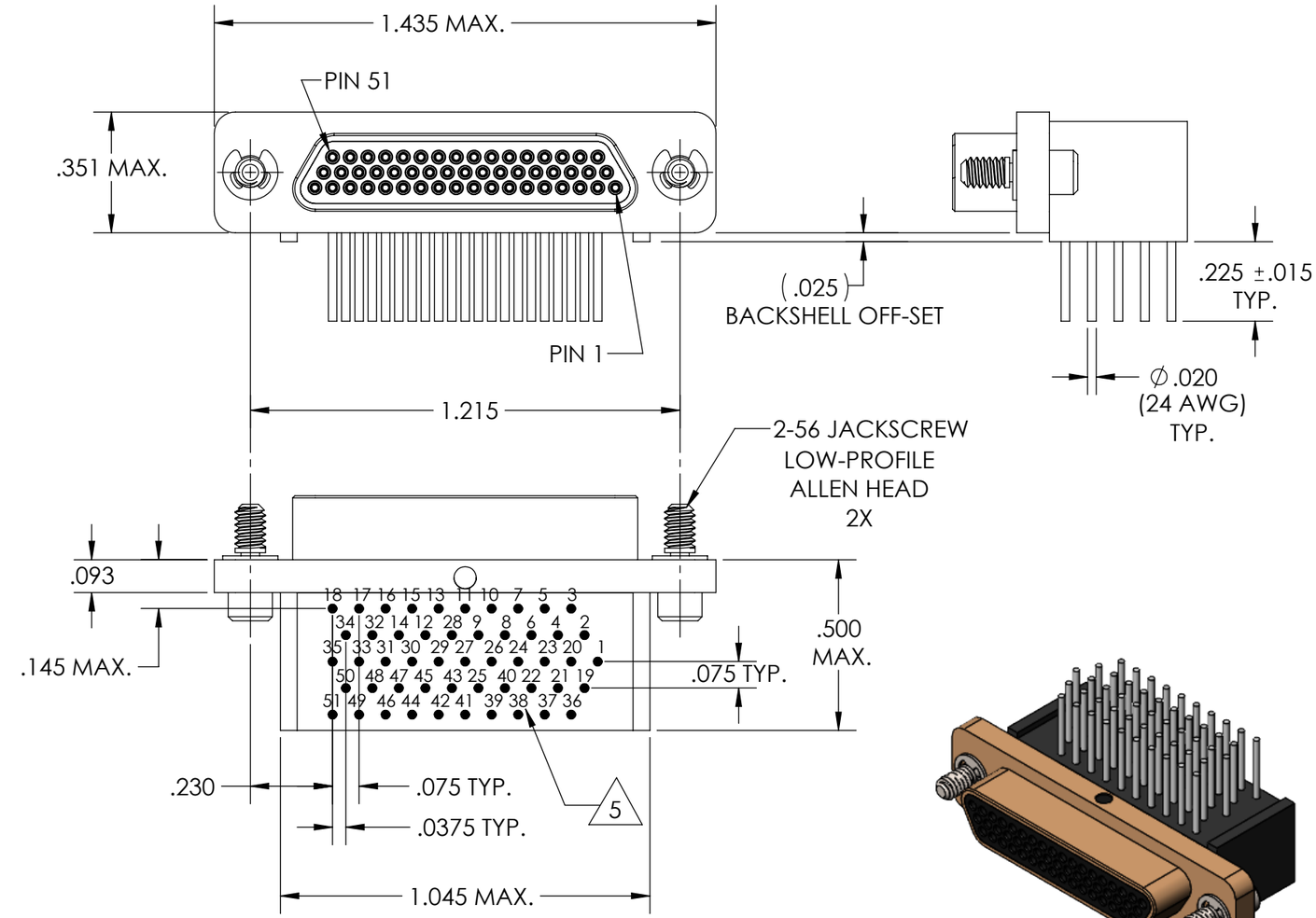

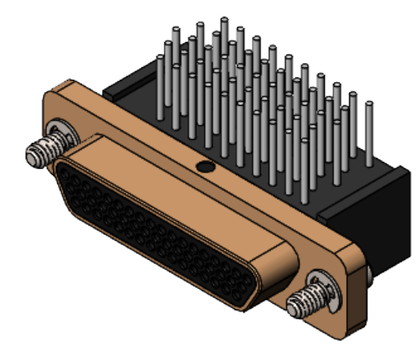

6. CONTACT HEIGHTS ARE TO BE PER QA-STD-101.

5 NUMBERS, (LEAD LOCATIONS), ARE SHOWN FOR REFERENCE ONLY AND DO NOT APPEAR ON ACTUAL PART.

4. PERFORMANCE SPECIFICATIONS:
   CURRENT RATING: 3 AMP MAX.
   DWV: 600 VAC
   TEMPERATURE RATING: -55°C TO 125°C

3 MATERIALS:
   SHELL: 6061-T6 ALUMINUM PER AMS-QQ-A200/8, CADMIUM PLATED PER AMS-QQ-P-416
   INSULATOR/BACKSHELL: PPS PER MIL-M-24519 GST-40F, COLOR: BLACK
   PIN CONTACTS: C17410 BERYLLIUM COPPER PER ASTM B768, GOLD PLATED PER ASTM B488
   24 AWG LEADS: COPPER ALLOY 60/40 TIN/LEAD PLATED PER AMS-P-81728
   HARDWARE: PASSIVATED STAINLESS STEEL IAW MIL-DTL-83513/05

2 MARKING: "UMI", DATE CODE, UMI PART NUMBER, UMI WORK ORDER NUMBER

1. CONNECTOR ASSEMBLY IS IAW MIL-DTL-83513 WHERE APPLICABLE.

NOTES: UNLESS OTHERWISE SPECIFIED.

QUALITY SYMBOLS
CRITICAL (C)
MAJOR
NO SYMBOLS = MINOR DIMENSIONS

UNLESS OTHERWISE SPECIFIED: ALL DIMENSIONS ARE IN INCHES

GENERAL TOLERANCES:
3 PLACES ±.005
2 PLACES ±.01
ANGULAR ±2°

ULTI-MATE CAGE CODE **58967**

SCALE: NONE
DWG SIZE: B
THIRD ANGLE PROJECTION
REVISE ON CAD ONLY

DRAWN BY & DATE: **DU 12/8/21**
CHECKED BY & DATE: **DW 12/8/21**
APPROVED BY & DATE: **DW 12/8/21**
CAD FILE NAME: **SD-839000101.slddrw**

TITLE: **MICRO-D CIRCUIT CONNECTOR, CM18R51-3P02-24CL-.225, CADMIUM PLATED SHELL**

MATERIAL: 3
ENG PROJECT #: **TR306**
PART NO. **839000101**
DRAWING NO. **SD-839000101**
SHEET NO. **1 of 1**
PART REV. **B**

THIS DRAWING CONTAINS INFORMATION THAT IS PROPRIETARY TO ULTI-MATE INCORPORATED AND SHOULD NOT BE USED WITHOUT WRITTEN PERMISSION.