PART REV	DWG ISSUE	DATE	ECN NO.	APPVD BY	REL BY
-	-	3/12/19	UMI7069	DU	DW

SD-836181817

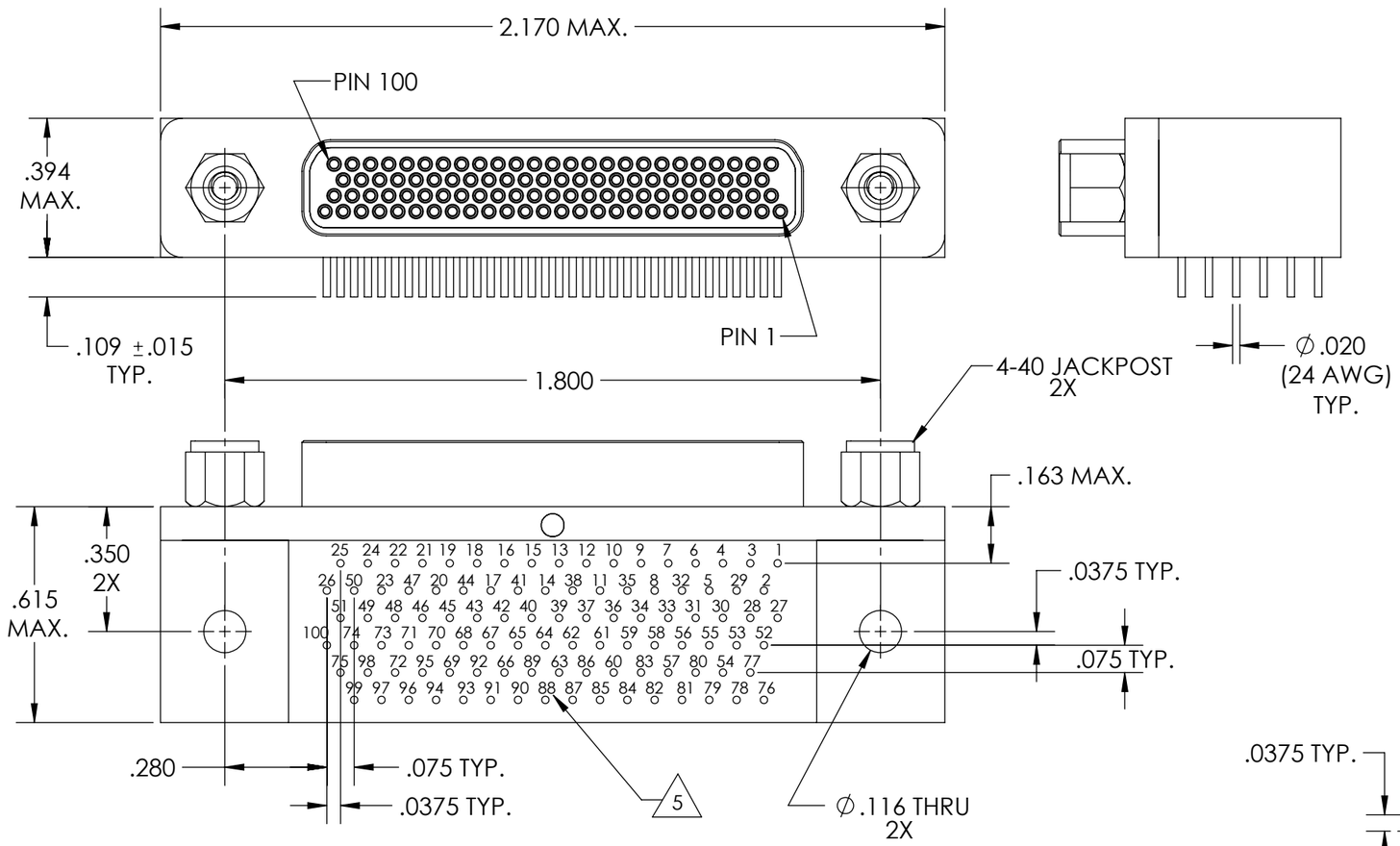

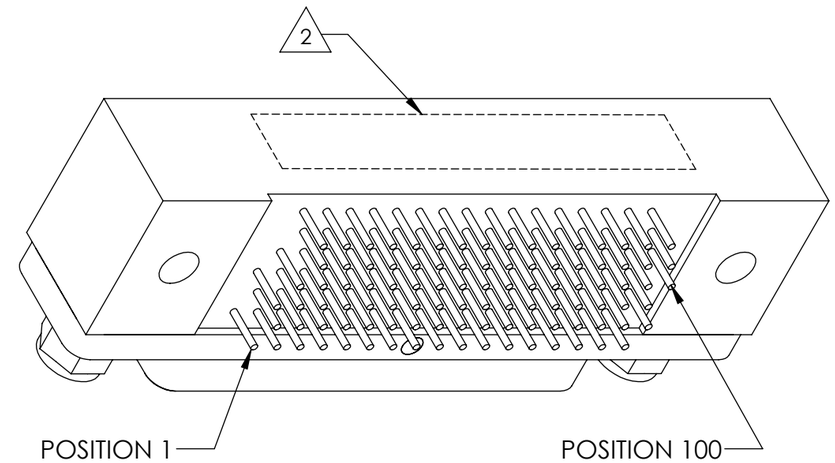

PCB VIEW

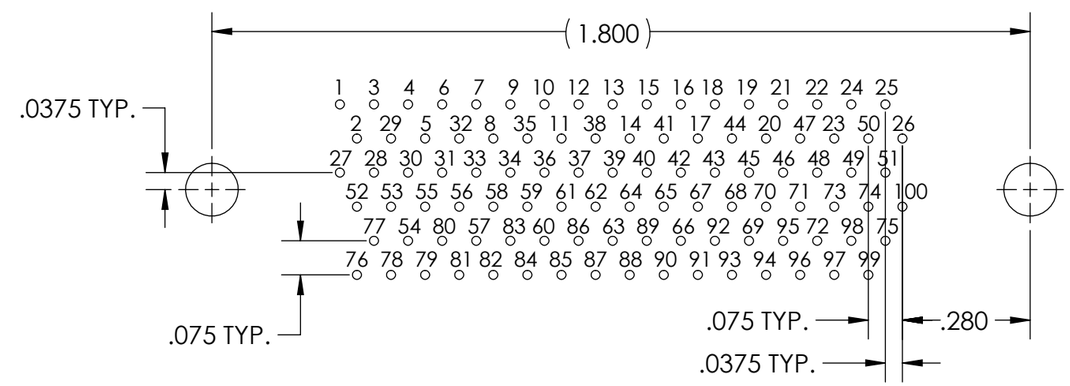

RECOMMENDED PCB LAYOUT

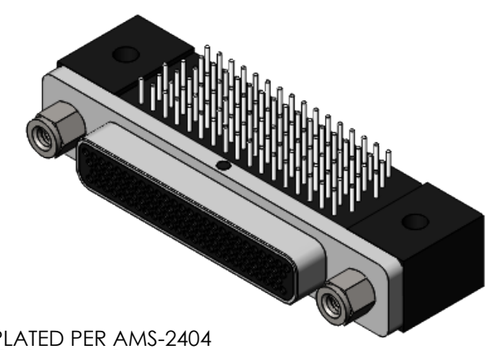

6. CONTACT HEIGHTS ARE TO BE PER QA-STD-101.

5 NUMBERS, (LEAD LOCATIONS), ARE SHOWN FOR REFERENCE ONLY AND DO NOT APPEAR ON ACTUAL PART.

4. PERFORMANCE SPECIFICATIONS:
   CURRENT RATING: 3 AMP MAX.
   DWV: 600 VAC
   TEMPERATURE RATING: -55°C TO 125°C

3 MATERIALS:
   SHELL: 6061-T6 ALUMINUM PER AMS-QQ-A200/8, NICKEL PLATED PER AMS-2404
   INSULATOR/BACKSHELL: PPS PER MIL-M-24519 GST-40F, COLOR: BLACK
   PIN CONTACTS: C17200 BERYLLIUM COPPER PER ASTM B194, GOLD PLATED PER ASTM B488
   24 AWG LEADS: TIN PLATED COPPER ALLOY PER A-A-59551, TYPE S
   HARDWARE: PASSIVATED STAINLESS STEEL, 300 SERIES

2 MARKING: "UMI", DATE CODE, UMI PART NUMBER, UMI WORK ORDER NUMBER

1. CONNECTOR ASSEMBLY IS IAW MIL-DTL-83513 UNLESS OTHERWISE SPECIFIED.

NOTES: UNLESS OTHERWISE SPECIFIED.

QUALITY SYMBOLS CRITICAL C MAJOR NO SYMBOLS = MINOR DIMENSIONS	UNLESS OTHERWISE SPECIFIED: ALL DIMENSIONS ARE IN INCHES GENERAL TOLERANCES: 3 PLACES ±.005 2 PLACES ±.01 ANGULAR ±2°	SCALE NONE	DWG SIZE B	THIRD ANGLE PROJECTION	REVISE ON CAD ONLY
		DRAWN BY & DATE DU 3/12/19		TITLE: MICRO-D CIRCUIT CONNECTOR, "MR" SERIES, CM8R100P17-S01	
		CHECKED BY & DATE DW 3/12/19		MATERIAL: 3	ENG PROJECT #: NONE
		APPROVED BY & DATE DW 3/12/19			Ulti-Mate Connector Inc.
	ULTI-MATE CAGE CODE 58967	CAD FILE NAME SD-836181817.slddrw		PART NO. 836181817	DRAWING NO. SD-836181817 / SHEET NO. 1 of 1
		THIS DRAWING CONTAINS INFORMATION THAT IS PROPRIETARY TO ULTI-MATE INCORPORATED AND SHOULD NOT BE USED WITHOUT WRITTEN PERMISSION.			PART REV. -