SD-835241010

REVISIONS				
PART REV.	DWG. ISSUE	DATE	ECN NO.	ENGINEER
-	-	1/26/23	UMI8243	JD

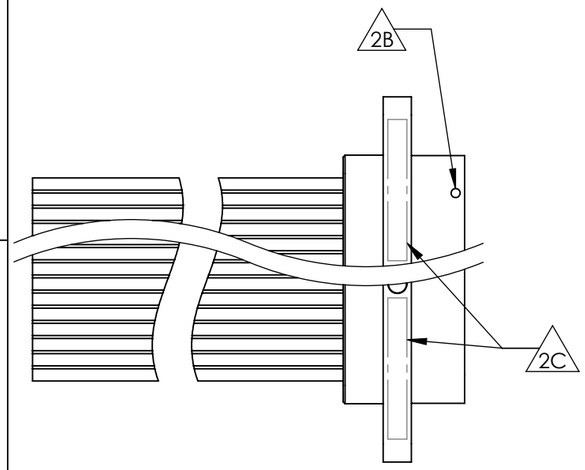

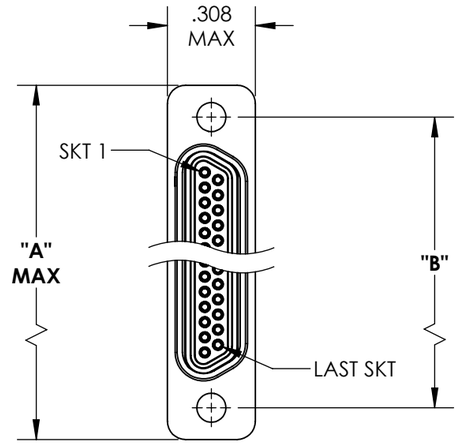

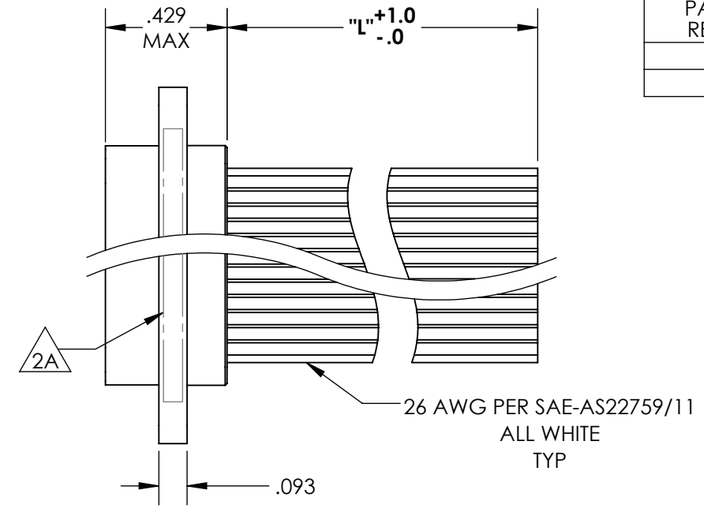

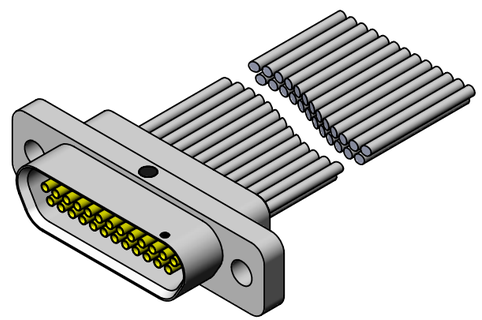

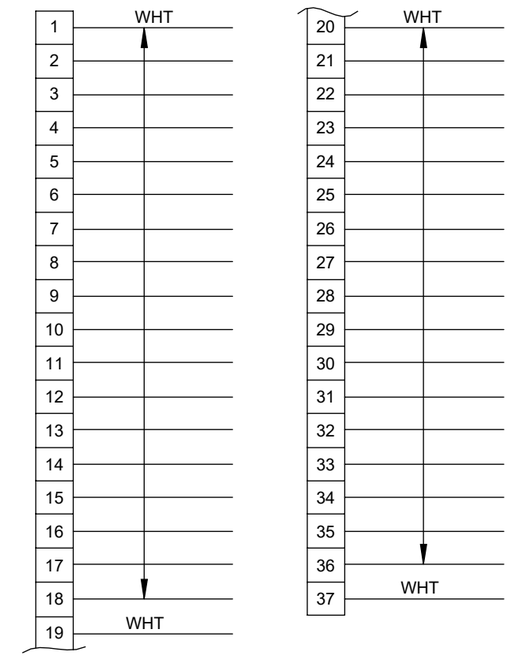

PART #	2A MIL-SPEC #	SIZE	A	B	L
835211010	M83513/4-A01N	09	0.785	0.565	18.0
835211020	M83513/4-A02N	09	0.785	0.565	36.0
835211130	M83513/4-A13N	09	0.785	0.565	72.0
835221010	M83513/4-B01N	15	0.935	0.715	18.0
835221020	M83513/4-B02N	15	0.935	0.715	36.0
835221130	M83513/4-B13N	15	0.935	0.715	72.0
835231010	M83513/4-C01N	21	1.085	0.865	18.0
835231020	M83513/4-C02N	21	1.085	0.865	36.0
835231130	M83513/4-C13N	21	1.085	0.865	72.0
835241010	M83513/4-D01N	25	1.185	0.965	18.0
835241020	M83513/4-D02N	25	1.185	0.965	36.0
835241130	M83513/4-D13N	25	1.185	0.965	72.0
835251010	M83513/4-E01N	31	1.335	1.115	18.0
835251020	M83513/4-E02N	31	1.335	1.115	36.0
835251130	M83513/4-E13N	31	1.335	1.115	72.0
835261010	M83513/4-F01N	37	1.485	1.265	18.0
835261020	M83513/4-F02N	37	1.485	1.265	36.0
835261130	M83513/4-F13N	37	1.485	1.265	72.0

5. CONTACT HEIGHTS ARE TO BE PER QA-STD-101
4. PERFORMANCE SPECIFICATIONS:
   CURRENT RATING: 3A MAX.
   INSULATION RESISTANCE: 5000 MΩ MIN.
   DWV: 600 VAC; AT 70,000 FT; 150 VAC
   TEMPERATURE RATING: 125°C
3. MATERIALS:
   SHELL: 6061-T6 ALUMINUM PER AMS-QQ-A200/8, NICKEL PLATED PER AMS 2404
   INSULATOR: PPS PER MIL-M-24519 GST-40F, COLOR: BLK
   SOCKET CONTACTS: C21000 BRASS ALLOY PER ASTM B36, GOLD PLATED PER ASTM B488
   WIRE: 26 AWG PER SAE-AS22759/11, COLOR CODE: ALL WHITE
   INTERFACIAL SEAL: FLUOROSILICONE PER MIL-R-25988
2. MARKING:
   2A SEE TABLE FOR MIL-SPEC #
   2B A DOT INDICATING POSITION 1
   2C "UMI", DATE CODE, & UMI WORK ORDER #
1. CONNECTOR ASSEMBLY IS IAW MIL-DTL-83513 UNLESS OTHERWISE SPECIFIED

NOTES: UNLESS OTHERWISE SPECIFIED

QUALITY SYMBOLS
CRITICAL (C)
MAJOR
NO SYMBOL = MINOR DIMENSION

UNLESS SPECIFIED:
ALL DIMENSIONS IN INCHES
GENERAL TOLERANCES:
3 PLACE ±.005
2 PLACE ±.01
ANGULAR ±2°

ALL EXTERNAL SPECIFICATIONS REFERENCED ON THIS DRAWING SHALL BE THE LATEST REVISION IN EFFECT

Ulti-Mate CAGE CODE **58967**

SCALE 2:1
DWG SIZE B
THIRD ANGLE PROJECTION
REVISE ON CAD ONLY

DRAWN BY JD
TITLE MIL-SPEC MICRO-D CONNECTOR ASSEMBLY, MIL-DTL-83513/04-XXXN (MRXXS0-26M1-XX.X-S01)

DATE DRAWN 1/23/23
MATERIAL 3
ENG PROJECT # TR1761
Ulti-Mate Connector Inc.

CAD FILENAME SD-835241010.slddrw
PART NO. SEE TABLE
DRAWING NO. SD-835241010
SHEET NO. 1 OF 1

THIS DRAWING CONTAINS INFORMATION THAT IS PROPRIETARY TO ULTI-MATE INCORPORATED AND SHOULD NOT BE USED WITHOUT WRITTEN PERMISSION.

PART REV. -