PART REV	DWG ISSUE	DATE	ECN NO.	APPVD BY	REL BY
-	-	3/4/19	UMI7060	DU	DW

SD-834110940

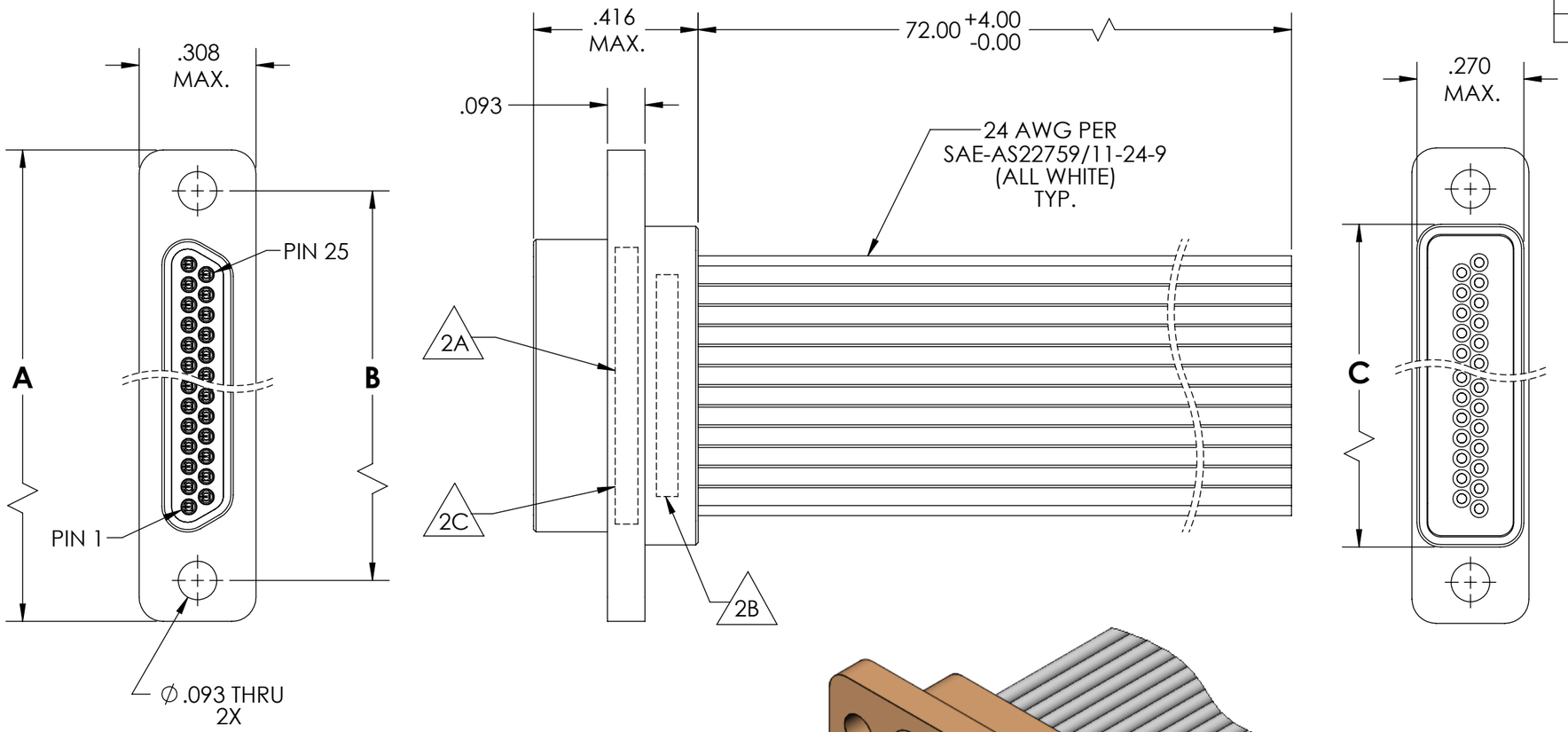

TABLE 1				
PART NUMBER	SIZE	A MAX.	B BSC.	C MAX.
834110940	9	.785	.565	.400
834120940	15	.935	.715	.550
834130940	21	1.085	.865	.700
834140940	25	1.185	.965	.800
834150940	31	1.335	1.115	.950
834160940	37	1.485	1.265	1.100

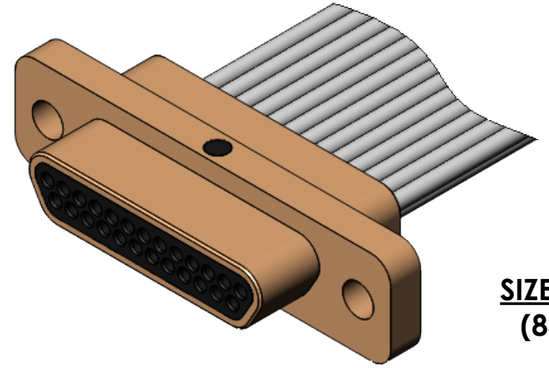

SIZE 25 SHOWN
(834140940)

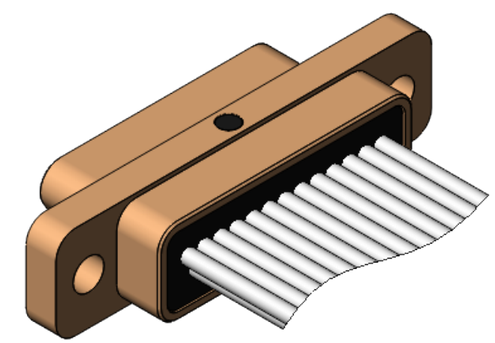

5. CONTACT HEIGHTS ARE TO BE PER QA-STD-101.

4. PERFORMANCE SPECIFICATIONS:
   CURRENT RATING: 3 AMPS MAX.
   DWV: 600 VAC
   TEMPERATURE RATING: -55°C TO 125°C

3. MATERIALS:
   SHELL: 6061-T6 ALUMINUM PER AMS-QQ-A200/8, CADMIUM PLATED PER AMS-QQ-P-416
   INSULATOR: PPS PER MIL-M-24519 GST-40F, COLOR: BLACK
   PIN CONTACTS: C17200 BERYLLIUM COPPER PER ASTM B194, GOLD PLATED PER ASTM B488
   WIRE: 24 AWG PER SAE-AS22759/11-24-9, COLOR CODE: ALL WHITE

2. MARKING:
   SIZES 9 & 15 — 2A "UMI", UMI PART NUMBER (MARK ON FLANGE)
   SIZES 9 & 15 — 2B DATE CODE, UMI WORK ORDER NUMBER (MARK ON POTTING WELL)
   SIZES 21 THRU 37 — 2C "UMI", DATE CODE, UMI PART NUMBER, UMI WORK ORDER NUMBER (MARK ON FLANGE)

1. CONNECTOR ASSEMBLY IS IAW MIL-DTL-83513 UNLESS OTHERWISE SPECIFIED.

NOTES: UNLESS OTHERWISE SPECIFIED.

QUALITY SYMBOLS
CRITICAL (C)
MAJOR
NO SYMBOLS = MINOR DIMENSIONS

UNLESS OTHERWISE SPECIFIED: ALL DIMENSIONS ARE IN INCHES

GENERAL TOLERANCES:
3 PLACES ±.005
2 PLACES ±.01
ANGULAR ±2°

ULTI-MATE CAGE CODE **58967**

SCALE 3 : 1 | DWG SIZE **B** | THIRD ANGLE PROJECTION | **REVISE ON CAD ONLY**

DRAWN BY & DATE: **DU 3/4/19**
CHECKED BY & DATE: **DW 3/4/19**
APPROVED BY & DATE: **DW 3/4/19**
CAD FILE NAME: **SD-834110940.slddrw**

TITLE: **MICRO-D CONNECTOR ASSEMBLY, MRXXP0-24M1-72.0, SIZES 9 THRU 37**

MATERIAL: 3
ENG PROJECT #: **NONE**
PART NO.: **SEE TABLE 1**
DRAWING NO.: **SD-834110940**
SHEET NO.: **1 of 1**
PART REV.: **-**

THIS DRAWING CONTAINS INFORMATION THAT IS PROPRIETARY TO ULTI-MATE INCORPORATED AND SHOULD NOT BE USED WITHOUT WRITTEN PERMISSION.