| PART REV | DWG ISSUE | DATE | ECN NO. | APPVD BY | REL BY |
|---|---|---|---|---|---|
| – | – | 02/17/11 | UMI4304 | T.POMBART | PER |
| – | A | 05/03/21 | UMI7745 | T.POMBART | PER |

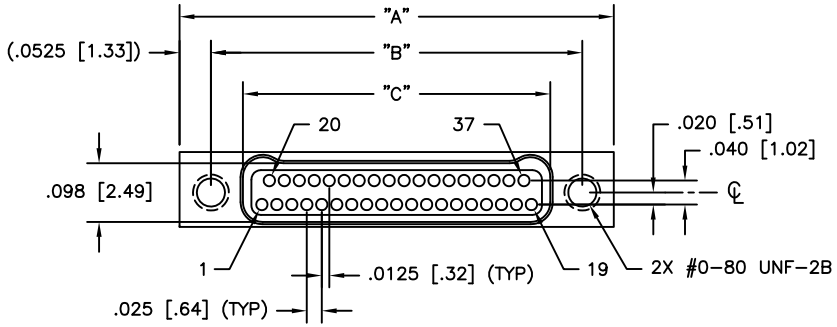


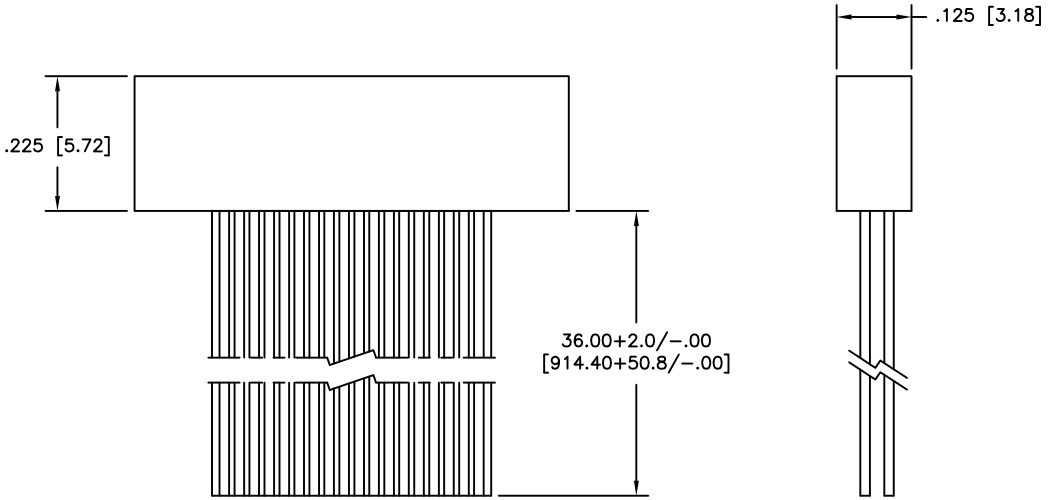


WIRING COLOR CODE

| | |
|---|---|
| 1, 11, 21, 31, 41, 51, 61 | BLACK |
| 2, 12, 22, 32, 42, 52, 62 | BROWN |
| 3, 13, 23, 33, 43, 53, 63 | RED |
| 4, 14, 24, 34, 44, 54, 64 | ORANGE |
| 5, 15, 25, 35, 45, 55, 65 | YELLOW |
| 6, 16, 26, 36, 46, 56 | GREEN |
| 7, 17, 27, 37, 47, 57 | BLUE |
| 8, 18, 28, 38, 48, 58 | VIOLET |
| 9, 19, 29, 39, 49, 59 | GRAY |
| 10, 20, 30, 40, 50, 60 | WHITE |

WIRE DIAGRAM REPRESENTS
LARGEST SIZE IN PART NO. TABLE

| PART NO. | SIZE | "A" | "B" | "C" |
|---|---|---|---|---|
| 833411637 | 9 | .375 [9.52] | .270 [6.86] | .163 [4.14] |
| 833421637 | 15 | .450 [11.43] | .345 [8.76] | .238 [6.04] |
| 833431637 | 21 | .525 [13.33] | .420 [10.67] | .313 [7.95] |
| 833441637 | 25 | .575 [14.60] | .470 [11.94] | .363 [9.22] |
| 833451637 | 31 | .650 [16.51] | .545 [13.84] | .438 [11.12] |
| 833461637 | 37 | .725 [18.41] | .620 [15.75] | .513 [13.03] |
| 833471637 | 51 | .900 [22.86] | .795 [20.19] | .688 [17.47] |
| 833481637 | 65 | 1.075 [27.30] | .970 [24.64] | .863 [21.92] |

3. PERFORMANCE: MEETS OR EXCEEDS M32139 PERFORMANCE SPECIFICATIONS
CONTACT RATING: 1 AMPERE MAXIMUM
DWV: 250 VAC
INSULATION RESISTANCE: 5000 MEGOHMS MINIMUM @ 100 VDC
CONTACT RESISTANCE: 0.071 VOLT MAXIMUM DROP @ 1.0 AMPS (.071 OHMS) W/6.00" OF WIRE LISTED BELOW, PER MIL-DTL-32139

3. INTERMATEABILITY: INTERFACE DIMENSIONS PER MIL-DTL-32139

2. MATERIALS: SHELL: ALUMINUM 6061-T6, ELECTROLESS NICKEL PLATED PER AMS2404
INSULATOR: LCP (LIQUID CRYSTAL POLYMER) GLCP-30F
CONTACT: BRASS ALLOY 735, GOLD PLATED PER ASTM B488
LEADS: 30 AWG, SAE-AS22759/33, COLOR CODED PER MIL-DTL-681, SYSTEM 1, EXCEPT USING 10 SOLID REPEATING COLORS

1. MARKINGS: UMI, UMI P/N, DATE CODE & W/O NO. AS SPACE PERMITS OTHERWISE ON BAG OR TAG

NOTES: UNLESS OTHERWISE SPECIFIED

QUALITY SYMBOLS
MAJOR ▼ =
CRITICAL (C) =
SPC (S) =

UNLESS SPECIFIED:
ALL DIMENSIONS IN INCHES
GENERAL TOLERANCES:
3 PLACE ±.005
2 PLACE ±.010
ANGULAR ±2°

Ulti-Mate CAGE CODE
58967

SCALE 5:1
DWG SIZE B
THIRD ANGLE PROJECTION
REVISE ON CAD ONLY
DRAWN BY & DATE UMI 03-09-10
CHECKED BY & DATE SEE ECN
APPROVED BY & DATE SEE ECN
TITLE: NANO-D DUAL ROW CONNECTOR
FEMALE, SIZE XX, NMLXX-2S07-30F6-36.0 S01
MATERIAL: 2
Ulti-Mate Connector Inc.
CAD FILENAME SD-833461637.DWG
PART NO. SEE "TAB BLOCK"
DRAWING NO. SD-833461637
SHEET NO. 1 OF 1
PART REV –

THIS DRAWING CONTAINS INFORMATION THAT IS PROPRIETARY TO ULTI-MATE INCORPORATED AND SHOULD NOT BE USED WITHOUT WRITTEN PERMISSION.