PART REV	DWG ISSUE	DATE	ECN NO.	APPVD BY	REL BY
–	–	02/17/11	UMI4304	T.POMBART	PER
–	A	11/15/22	UMI8201	T.POMBART	PER

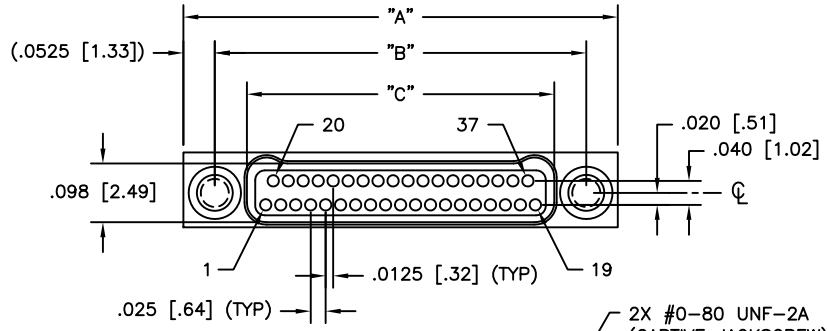

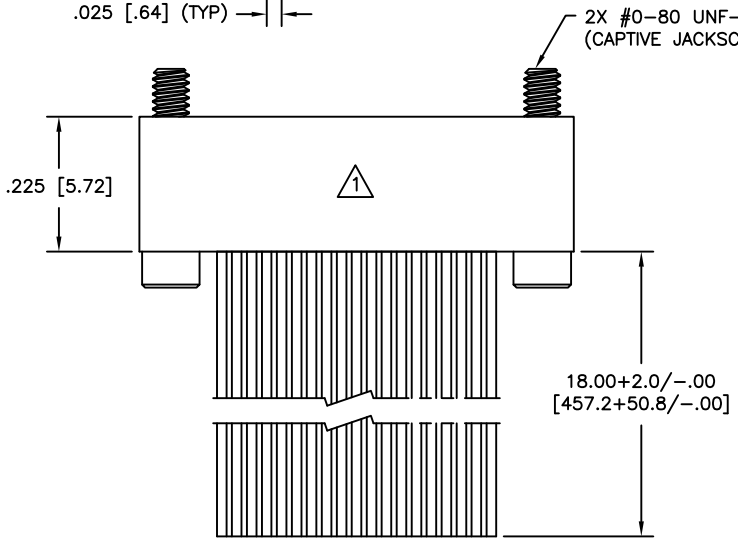

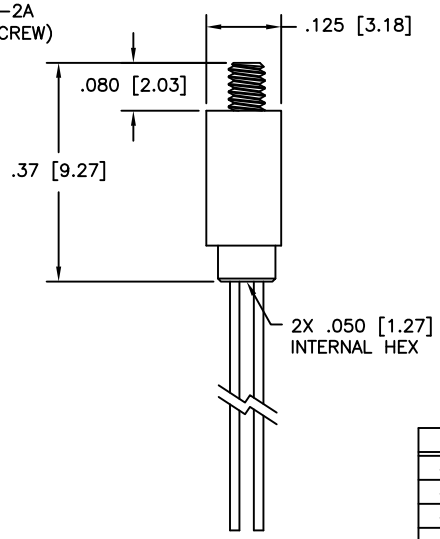

WIRING COLOR CODE

1, 11, 21, 31, 41, 51, 61	—	BLACK
2, 12, 22, 32, 42, 52, 62	—	BROWN
3, 13, 23, 33, 43, 53, 63	—	RED
4, 14, 24, 34, 44, 54, 64	—	ORANGE
5, 15, 25, 35, 45, 55, 65	—	YELLOW
6, 16, 26, 36, 46, 56	—	GREEN
7, 17, 27, 37, 47, 57	—	BLUE
8, 18, 28, 38, 48, 58	—	VIOLET
9, 19, 29, 39, 49, 59	—	GRAY
10, 20, 30, 40, 50, 60	—	WHITE

WIRE DIAGRAM REPRESENTS
LARGEST SIZE IN PART NO. TABLE

PART NO.	SIZE	"A"	"B"	"C"
833411622	9	.375 [9.52]	.270 [6.86]	.163 [4.14]
833421622	15	.450 [11.43]	.345 [8.76]	.238 [6.04]
833431622	21	.525 [13.33]	.420 [10.67]	.313 [7.95]
833441622	25	.575 [14.60]	.470 [11.94]	.363 [9.22]
833451622	31	.650 [16.51]	.545 [13.84]	.438 [11.12]
833461622	37	.725 [18.41]	.620 [15.75]	.513 [13.03]
833471622	51	.900 [22.86]	.795 [20.19]	.688 [17.47]
833481622	65	1.075 [27.30]	.970 [24.64]	.863 [21.92]

3. PERFORMANCE: MEETS OR EXCEEDS M32139 PERFORMANCE SPECIFICATIONS
CONTACT RATING: 1 AMPERE MAXIMUM
DWV: 250 VAC
INSULATION RESISTANCE: 5000 MEGOHMS MINIMUM @ 100 VDC
CONTACT RESISTANCE: 0.071 VOLT MAXIMUM DROP @ 1.0 AMPS (.071 OHMS) W/6.00" OF WIRE LISTED BELOW, PER MIL–DTL–32139

3. INTERMATEABILITY: INTERFACE DIMENSIONS PER MIL–DTL–32139

2. MATERIALS: SHELL: ALUMINUM 6061–T6, ELECTROLESS NICKEL PLATED PER AMS2404
INSULATOR: LCP (LIQUID CRYSTAL POLYMER) GLCP–30F
CONTACT: BRASS ALLOY 735, GOLD PLATED PER ASTM B488
LEADS: 30 AWG, NEMA HP3, TYPE ET, COLOR CODED PER MIL–DTL–681, SYSTEM 1, EXCEPT USING 10 SOLID REPEATING COLORS
HARDWARE: 303 STAINLESS PER ASTM 582

1. MARKINGS: UMI, UMI P/N, DATE CODE & W/O NO. AS SPACE PERMITS OTHERWISE ON BAG OR TAG

NOTES: UNLESS OTHERWISE SPECIFIED

QUALITY SYMBOLS
MAJOR ▼ =
CRITICAL (C) =
SPC (S) =

UNLESS SPECIFIED:
ALL DIMENSIONS IN INCHES
GENERAL TOLERANCES:
3 PLACE ±.005
2 PLACE ±.010
ANGULAR ±2°

Ulti-Mate CAGE CODE
58967

SCALE 5:1 | DWG SIZE B | THIRD ANGLE PROJECTION | REVISE ON CAD ONLY

DRAWN BY & DATE: UMI 03–09–10
CHECKED BY & DATE: SEE ECN
APPROVED BY & DATE: SEE ECN
CAD FILENAME: SD–833461622.DWG

TITLE: NANO–D DUAL ROW CONNECTOR
FEMALE, SIZE XX, NMLXX–2S02–30F6–18.0 S01

MATERIAL: 2

Ulti-Mate Connector Inc.

PART NO.: SEE "TAB BLOCK"
DRAWING NO.: SD–833461622
SHEET NO.: 1 OF 1
PART REV: –

THIS DRAWING CONTAINS INFORMATION THAT IS PROPRIETARY TO ULTI-MATE INCORPORATED AND SHOULD NOT BE USED WITHOUT WRITTEN PERMISSION.