PART REV	DWG ISSUE	DATE	ECN NO.	APPVD BY	REL BY
–	–	01/09/15	UMI5503	T.POMBART	PER

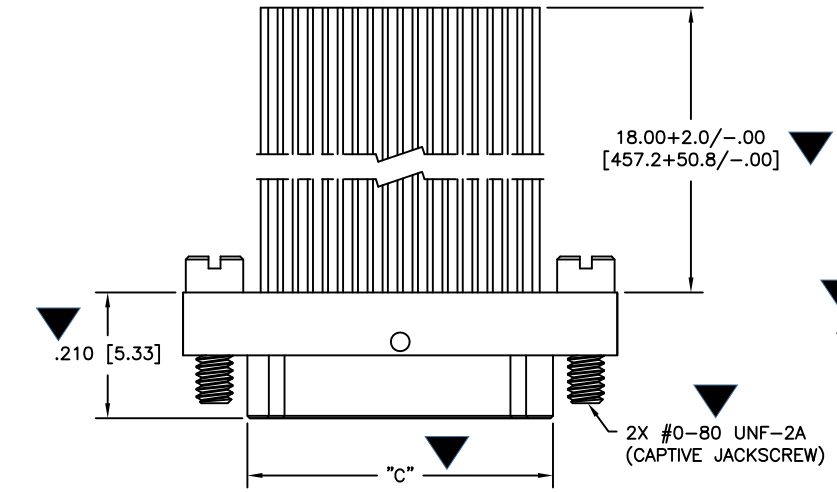

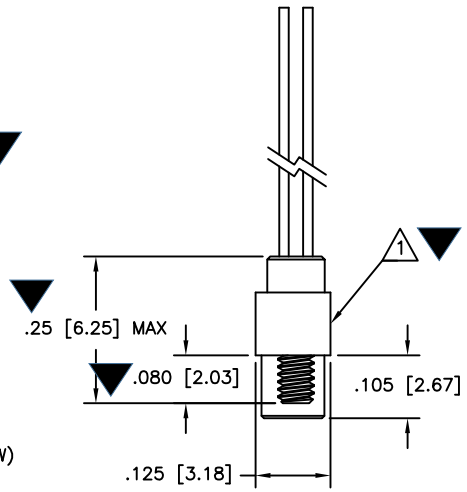

WIRING COLOR CODE

C

1, 11, 21, 31	—	BLACK
2, 12, 22, 32	—	BROWN
3, 13, 23, 33	—	RED
4, 14, 24, 34	—	ORANGE
5, 15, 25, 35	—	YELLOW
6, 16, 26, 36	—	GREEN
7, 17, 27, 37	—	BLUE
8, 18, 28	—	VIOLET
9, 19, 29	—	GRAY
10, 20, 30	—	WHITE

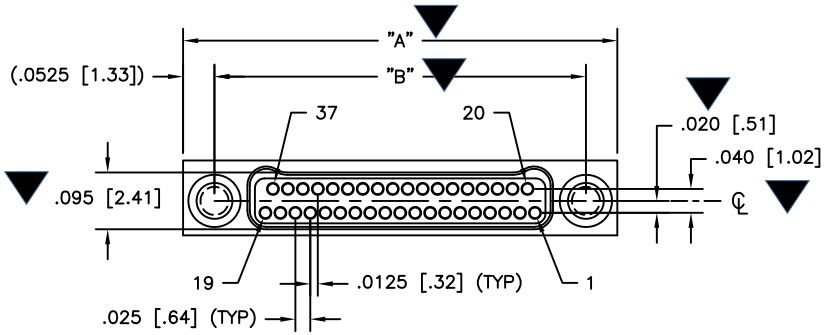

PART NO.	SIZE	"A"	"B"	"C"
833311625	9	.375 [9.52]	.270 [6.86]	.160 [4.06]
833321625	15	.450 [11.43]	.345 [8.76]	.235 [5.97]
833331625	21	.525 [13.33]	.420 [10.67]	.310 [7.87]
833341625	25	.575 [14.60]	.470 [11.94]	.360 [9.14]
833351625	31	.650 [16.51]	.545 [13.84]	.435 [11.05]
833361625	37	.725 [18.41]	.620 [15.75]	.510 [12.95]
833371625	51	.900 [22.86]	.795 [20.19]	.685 [17.40]
833381625	65	1.075 [27.30]	.970 [24.64]	.860 [21.84]

3. PERFORMANCE: MEETS OR EXCEEDS M32139 PERFORMANCE SPECIFICATIONS
C
CONTACT RATING: 1 AMPERE MAXIMUM
DWV: 250 VAC
INSULATION RESISTANCE: 5000 MEGOHMS MINIMUM @ 100 VDC
CONTACT RESISTANCE: 0.071 VOLT MAXIMUM DROP @ 1.0 AMPS (.071 OHMS) W/6.00" OF WIRE LISTED BELOW, PER MIL–DTL–32139

2. MATERIALS: SHELL: ALUMINUM 6061–T6, ELECTROLESS NICKEL PLATED PER AMS2404
INSULATOR: LCP (LIQUID CRYSTAL POLYMER) GLCP–30F
CONTACT: BERYLLIUM COPPER PER ASTM B194, GOLD PLATED PER ASTM B488
LEADS: 30 AWG, NEMA HP3, TYPE ET, COLOR CODED PER MIL–DTL–681, SYSTEM 1, EXCEPT USING 10 SOLID REPEATING COLORS
HARDWARE: 303 STAINLESS PER ASTM 582

1. MARKINGS: UMI, DATE CODE, UMI P/N AS SPACE PERMITS OTHERWISE ON BAG OR TAG

NOTES: UNLESS OTHERWISE SPECIFIED

QUALITY SYMBOLS
MAJOR =
CRITICAL (C) =
SPC (S) =

UNLESS SPECIFIED:
ALL DIMENSIONS IN INCHES
GENERAL TOLERANCES:
3 PLACE ±.005
2 PLACE ±.010
ANGULAR ±2°

Ulti-Mate CAGE CODE
58967

SCALE 5:1 | DWG SIZE B | THIRD ANGLE PROJECTION | REVISE ON CAD ONLY

DRAWN BY & DATE: UMI 01–07–15
CHECKED BY & DATE: SEE ECN
APPROVED BY & DATE: SEE ECN
CAD FILENAME: SD–833361625.DWG

TITLE: NANO–D DUAL ROW CONNECTOR
MALE, SIZE XX, NMLXX–2P05–30F6–18.0 S01

MATERIAL: 2

Ulti-Mate Connector Inc.

PART NO.: SEE "TAB BLOCK" | DRAWING NO.: SD–833361625 | SHEET NO. 1 OF 1

THIS DRAWING CONTAINS INFORMATION THAT IS PROPRIETARY TO ULTI-MATE INCORPORATED AND SHOULD NOT BE USED WITHOUT WRITTEN PERMISSION.

REV –