PART REV	DWG ISSUE	DATE	ECN NO.	APPVD BY	REL BY
–	–	02/17/11	UMI4305	T.POMBART	PER
A	A	11/19/20	UMI7610	T.POMBART	PER

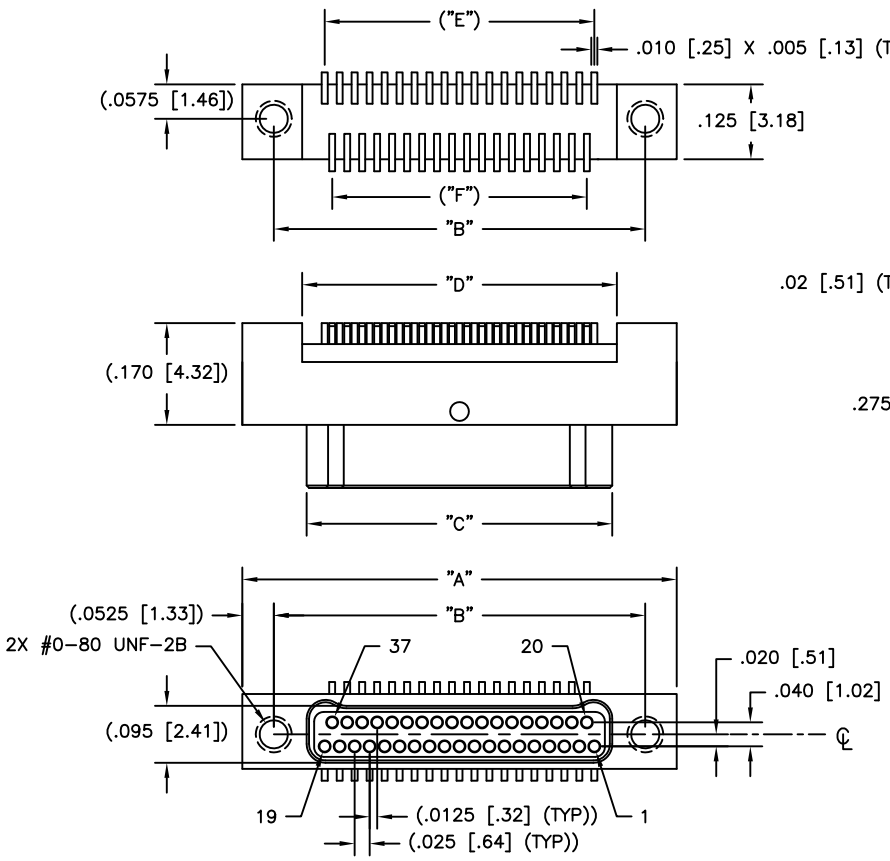

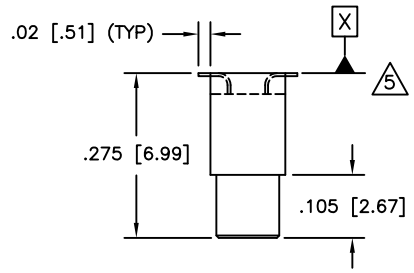

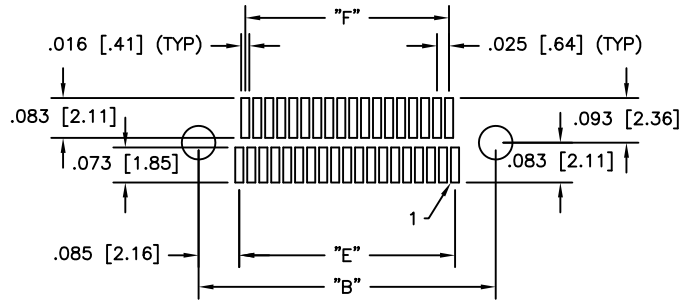

RECOMMENDED PC BOARD LAYOUT
(COMPONENT SIDE)
SCALE 4:1

PART NO.	SIZE	"A"	"B"	"C"	"D"	"E"	"F"
832311717	9	.375 [9.52]	.270 [6.86]	.160 [4.06]	.175 [4.44]	.100 [2.54]	.075 [1.90]
832321717	15	.450 [11.43]	.345 [8.76]	.235 [5.97]	.250 [6.35]	.175 [4.44]	.150 [3.81]
832331717	21	.525 [13.33]	.420 [10.67]	.310 [7.87]	.325 [8.25]	.250 [6.35]	.225 [5.71]
832341717	25	.575 [14.60]	.470 [11.94]	.360 [9.14]	.375 [9.52]	.300 [7.62]	.275 [6.98]
832351717	31	.650 [16.51]	.545 [13.84]	.435 [11.05]	.450 [11.43]	.375 [9.52]	.350 [8.89]
832361717	37	.725 [18.41]	.620 [15.75]	.510 [12.95]	.525 [13.33]	.450 [11.43]	.425 [10.79]
832371717	51	.900 [22.86]	.795 [20.19]	.685 [17.40]	.700 [17.78]	.625 [15.87]	.600 [15.24]
832381717	65	1.075 [27.30]	.970 [24.64]	.860 [21.84]	.875 [22.22]	.800 [20.32]	.775 [19.68]

5. LEAD TOLERANCE: LEADS TO BE CO-PLANAR WITHIN +.003/-.001 FROM SURFACE "X"

4. PERFORMANCE: MANUFACTURED TO THE FOLLOWING M32139 PERFORMANCE SPECIFICATIONS
   CONTACT RATING: 1 AMPERE MAXIMUM AT AMBIENT TEMPERATURE
   DWV: 250 VAC
   INSULATION RESISTANCE: 5000 MEGOHMS MINIMUM @ 100 VDC
   CONTACT RESISTANCE: 0.021 VOLT MAXIMUM DROP @ 1.0 AMPS (.021 OHMS)

3. INTERMATEABILITY: INTERFACE DIMENSIONS PER MIL-DTL-32139

2. MATERIALS: SHELL: ALUMINUM 6061-T6, ELECTROLESS NICKEL PLATED PER AMS2404
   INSULATOR: LCP (LIQUID CRYSTAL POLYMER) GLCP-30F
   CONTACT: BERYLLIUM COPPER PER ASTM B194, GOLD PLATED PER ASTM B488
   LEADS: SN/PB PLATED

1. MARKINGS: UMI, UMI P/N, DATE CODE & W/O NO. AS SPACE PERMITS OTHERWISE ON BAG OR TAG

NOTES: UNLESS OTHERWISE SPECIFIED

QUALITY SYMBOLS
MAJOR ▼ =
CRITICAL (C) =
SPC (S) =

UNLESS SPECIFIED:
ALL DIMENSIONS IN INCHES
GENERAL TOLERANCES:
3 PLACE ±.005
2 PLACE ±.010
ANGULAR ±2°

Ulti-Mate CAGE CODE
58967

SCALE 5:1
DWG SIZE B
THIRD ANGLE PROJECTION
REVISE ON CAD ONLY
DRAWN BY & DATE UMI 03-09-10
CHECKED BY & DATE SEE ECN
APPROVED BY & DATE SEE ECN
CAD FILENAME SD-832361717.DWG

TITLE:
NANO-D DUAL ROW CONNECTOR
MALE, SIZE XX, CNM36LXX2P071-S01

MATERIAL: 2
Ulti-Mate Connector Inc.
PART NO. SEE "TAB BLOCK"
DRAWING NO. SD-832361717
SHEET NO. 1 OF 1
PART REV A

THIS DRAWING CONTAINS INFORMATION THAT IS PROPRIETARY TO ULTI-MATE INCORPORATED AND SHOULD NOT BE USED WITHOUT WRITTEN PERMISSION.