PART REV	DWG ISSUE	DATE	ECN NO.	APPVD BY	REL BY
–	–	10/19/18	UMI6919	T.POMBART	PER

WIRING COLOR CODE

1 ——— BLACK
2 ——— BROWN
3 ——— RED
4 ——— ORANGE
5 ——— YELLOW
6 ——— GREEN
7 ——— BLUE
8 ——— VIOLET
9 ——— GRAY
10 ——— WHITE
11 ——— WHT/BLK
12 ——— WHT/BRN
13 ——— WHT/RED
14 ——— WHT/ORG
15 ——— WHT/YELL
16 ——— WHT/GRN

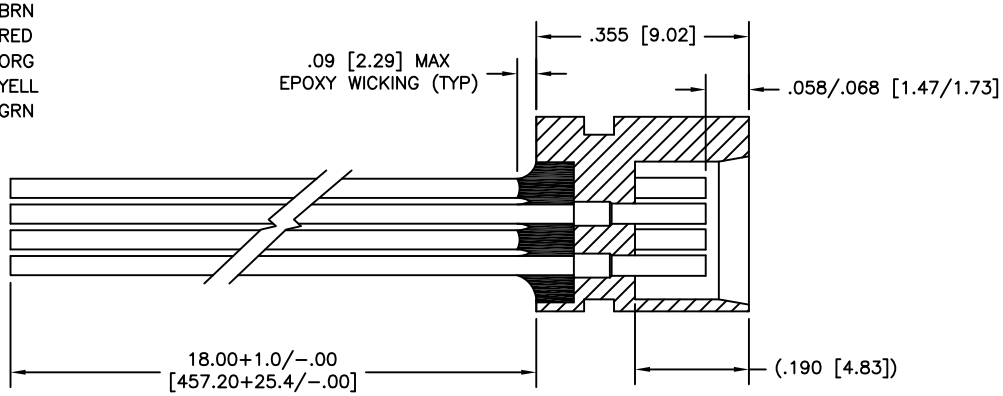

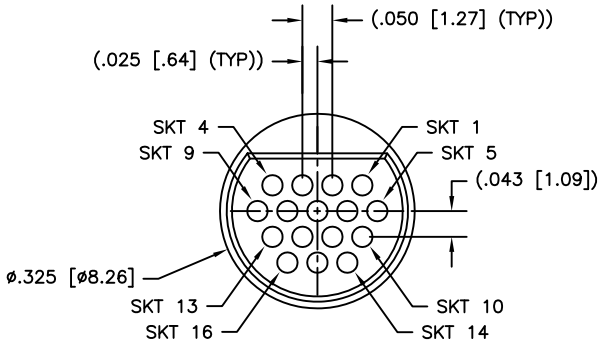

3. PERFORMANCE: MEETS OR EXCEEDS M83513 PERFORMANCE SPECIFICATIONS
CONTACT RATING: 3 AMPERE MAXIMUM
INSULATION RESISTANCE: 5000 MEGOHMS MINIMUM @ 500 VDC
CONTACT RESISTANCE: 8 MILLIOHMS MAX @ 2.5 AMPS

2. MATERIALS: INSULATOR: LCP (LIQUID CRYSTAL POLYMER) GLCP–30F, BLACK
CONTACTS: BRASS ALLOY 210, GOLD PLATED PER ASTM B488
LEADS: 26 AWG, MIL–W–16878/4, COLOR CODED

1. MARKINGS: UMI, UMI P/N, DATE CODE & W/O NO. ON BAG OR TAG

NOTES: UNLESS OTHERWISE SPECIFIED

QUALITY SYMBOLS
MAJOR ▼ =
CRITICAL (C) =
SPC (S) =

UNLESS SPECIFIED:
ALL DIMENSIONS IN INCHES
GENERAL TOLERANCES:
3 PLACE ±.005
2 PLACE ±.010
ANGULAR ±2°

Ulti-Mate CAGE CODE
58967

SCALE 5:1	DWG SIZE B	THIRD ANGLE PROJECTION	REVISE ON CAD ONLY
DRAWN BY & DATE PER 10–19–18		TITLE: MICRO CIRCULAR CONNECTOR, FEMALE (RECEPTACLE), SIZE 16, RPOP–16S–26E5–18.0	
CHECKED BY & DATE SEE ECN			
APPROVED BY & DATE SEE ECN		MATERIAL:	Ulti-Mate Connector Inc.
CAD FILENAME SD–812081120.DWG		PART NO. 812081120	DRAWING NO. SD–812081120 / SHEET NO. 1 OF 1

THIS DRAWING CONTAINS INFORMATION THAT IS PROPRIETARY TO ULTI-MATE INCORPORATED AND SHOULD NOT BE USED WITHOUT WRITTEN PERMISSION.

PART REV –