PART REV	DWG ISSUE	DATE	ECN NO.	APPVD BY	REL BY
–	–	05/27/15	UMI5627	T.POMBART	PER

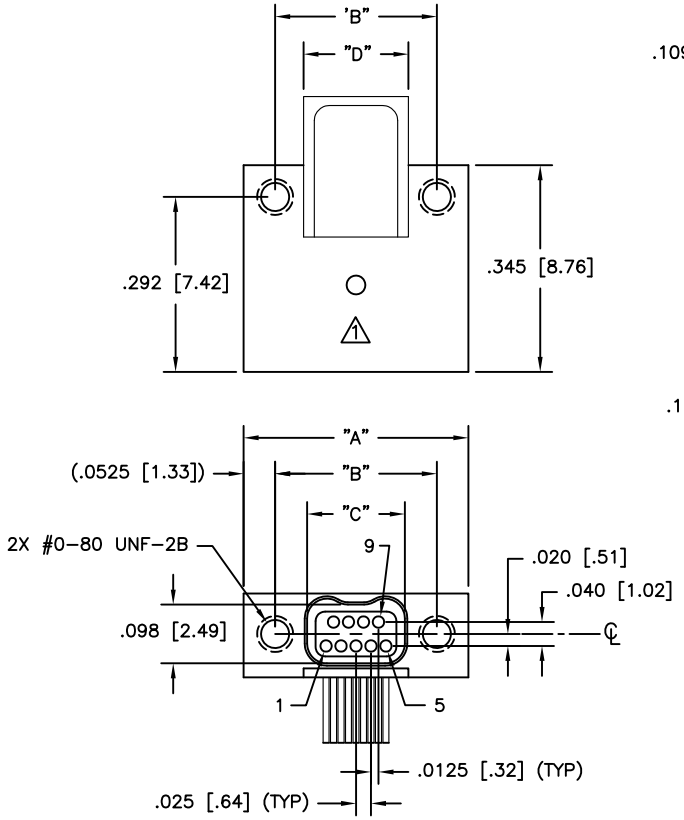

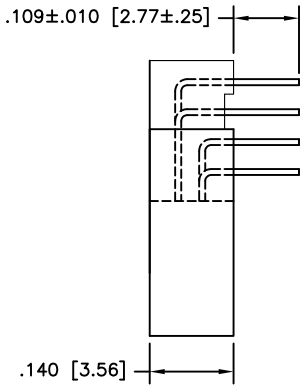

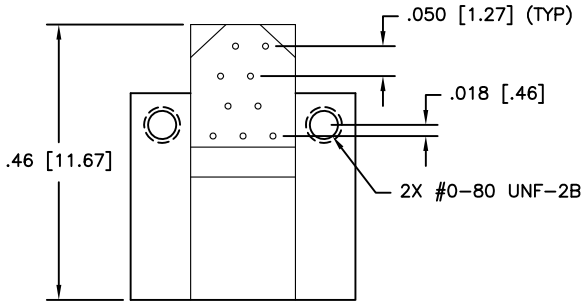

RECOMMENDED PC BOARD LAYOUT (COMPONENT SIDE)

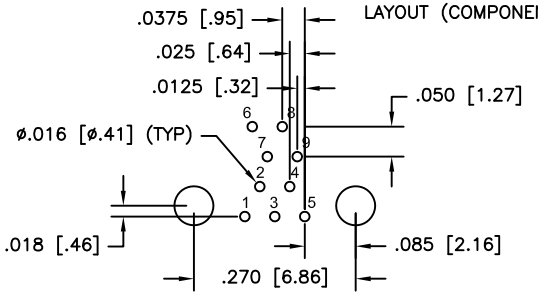

PART NO.	SIZE	"A"	"B"	"C"	"D"
432411827	9	.375 [9.52]	.270 [6.86]	.163 [4.06]	.175 [4.44]

3. PERFORMANCE: MEETS OR EXCEEDS M32139 PERFORMANCE SPECIFICATIONS
CONTACT RATING: 1 AMPERE MAXIMUM
DWV: 250 VAC
INSULATION RESISTANCE: 5000 MEGOHMS MINIMUM @ 100 VDC
CONTACT RESISTANCE: 0.021 VOLT MAXIMUM DROP @ 1.0 AMPS (.021 OHMS)

2. MATERIALS: SHELL: ALUMINUM 6061-T6, ELECTROLESS NICKEL PLATED PER AMS2404
INSULATOR: LCP (LIQUID CRYSTAL POLYMER) GLCP-30F
CONTACT: BERYLLIUM COPPER PER ASTM B194, GOLD PLATED PER ASTM B488
BACKSHELL: PPS PER MIL-M-24519 GST-40F
LEADS: 30 AWG (ø .010) GOLD PLATED (RoHS COMPLIANT)
EPOXY: 200° CELSIUS

1. MARKINGS: UMI, UMI P/N, DATE CODE & W/O NO. AS SPACE PERMITS OTHERWISE ON BAG OR TAG

NOTES: UNLESS OTHERWISE SPECIFIED

QUALITY SYMBOLS
MAJOR ▼ =
CRITICAL (C) =
SPC (S) =

UNLESS SPECIFIED:
ALL DIMENSIONS IN INCHES
GENERAL TOLERANCES:
3 PLACE ±.005
2 PLACE ±.010
ANGULAR ±2°

Ulti-Mate CAGE CODE
58967

SCALE 5:1
DWG SIZE B
THIRD ANGLE PROJECTION
REVISE ON CAD ONLY
DRAWN BY & DATE UMI 05-27-15
CHECKED BY & DATE SEE ECN
APPROVED BY & DATE SEE ECN
CAD FILENAME SD-432411827.DWG
TITLE: NANO-D DUAL ROW CONNECTOR FEMALE, SIZE 09, CNM8L09-2S072-S01 HT
MATERIAL: 2
Ulti-Mate Connector Inc.
PART NO. 432411827
DRAWING NO. SD-432411827
SHEET NO. 1 OF 1
REV –

THIS DRAWING CONTAINS INFORMATION THAT IS PROPRIETARY TO ULTI-MATE INCORPORATED AND SHOULD NOT BE USED WITHOUT WRITTEN PERMISSION.