PART REV	DWG ISSUE	DATE	ECN NO.	APPVD BY	REL BY
–	–	09/12/19	UMI7274	T.POMBART	PER

WIRING COLOR CODE

1 ——— BLACK
2 ——— BROWN
3 ——— RED
4 ——— ORANGE
5 ——— YELLOW
6 ——— GREEN
7 ——— BLUE

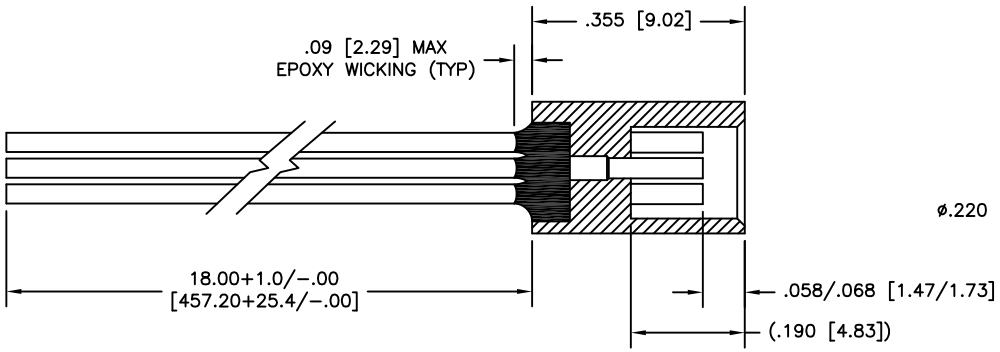

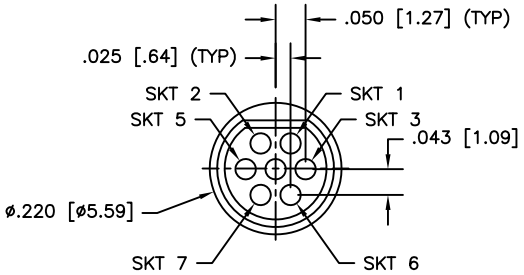

3. PERFORMANCE: CONTACT RATING: 3 AMPERE MAXIMUM (AT AMBIENT TEMPERATURE)
INSULATION RESISTANCE: 5000 MEGOHMS MINIMUM @ 500 VDC

2. MATERIALS: INSULATOR: PPS PER MIL–M–24519 GST–40F, OR LCP (LIQUID CRYSTAL POLYMER) GLCP–30F COLOR: BLACK
CONTACTS: BRASS ALLOY 210, GOLD PLATED PER ASTM B488
LEADS: 26 AWG, MIL–W–16878/4, COLOR CODED
EPOXY: 200° CELSIUS

1. MARKINGS: UMI, UMI P/N, DATE CODE & W/O NO. ON BAG OR TAG

NOTES: UNLESS OTHERWISE SPECIFIED

QUALITY SYMBOLS
MAJOR ▼ =
CRITICAL (C) =
SPC (S) =

UNLESS SPECIFIED:
ALL DIMENSIONS IN INCHES
GENERAL TOLERANCES:
3 PLACE ±.005
2 PLACE ±.010
ANGULAR ±2°

Ulti-Mate CAGE CODE
58967

SCALE 10:1	DWG SIZE B	THIRD ANGLE PROJECTION	REVISE ON CAD ONLY
DRAWN BY & DATE PER 09–06–19		TITLE: MICRO CIRCULAR CONNECTOR, FEMALE (RECEPTACLE), SIZE 7, RPOP–07S–26E6–18.0 HT	
CHECKED BY & DATE SEE ECN			
APPROVED BY & DATE SEE ECN		MATERIAL:	Ulti-Mate Connector Inc.
CAD FILENAME SD–412051800.DWG		PART NO. 412051800	DRAWING NO. SD–412051800 / SHEET NO. 1 OF 1

THIS DRAWING CONTAINS INFORMATION THAT IS PROPRIETARY TO ULTI-MATE INCORPORATED AND SHOULD NOT BE USED WITHOUT WRITTEN PERMISSION.

PART REV –